TK - 208 / 308 SIMPLE PROGARMMING

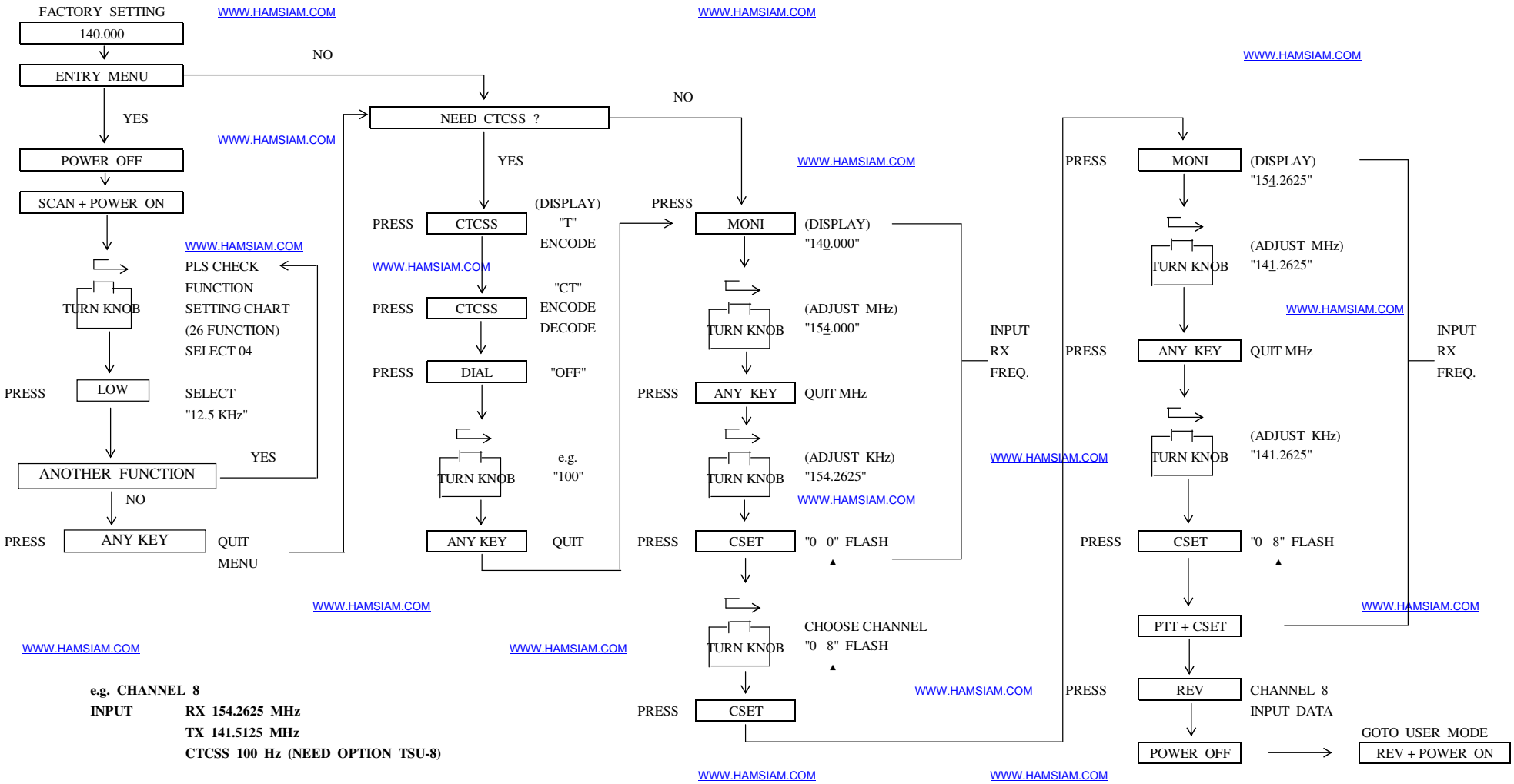

WWW.HAMSIAM.COM

e.g. CHANNEL 8

INPUT **RX 154.2625 MHz**
TX 141.5125 MHz
CTCSS 100 Hz (NEED OPTION TSU-8)